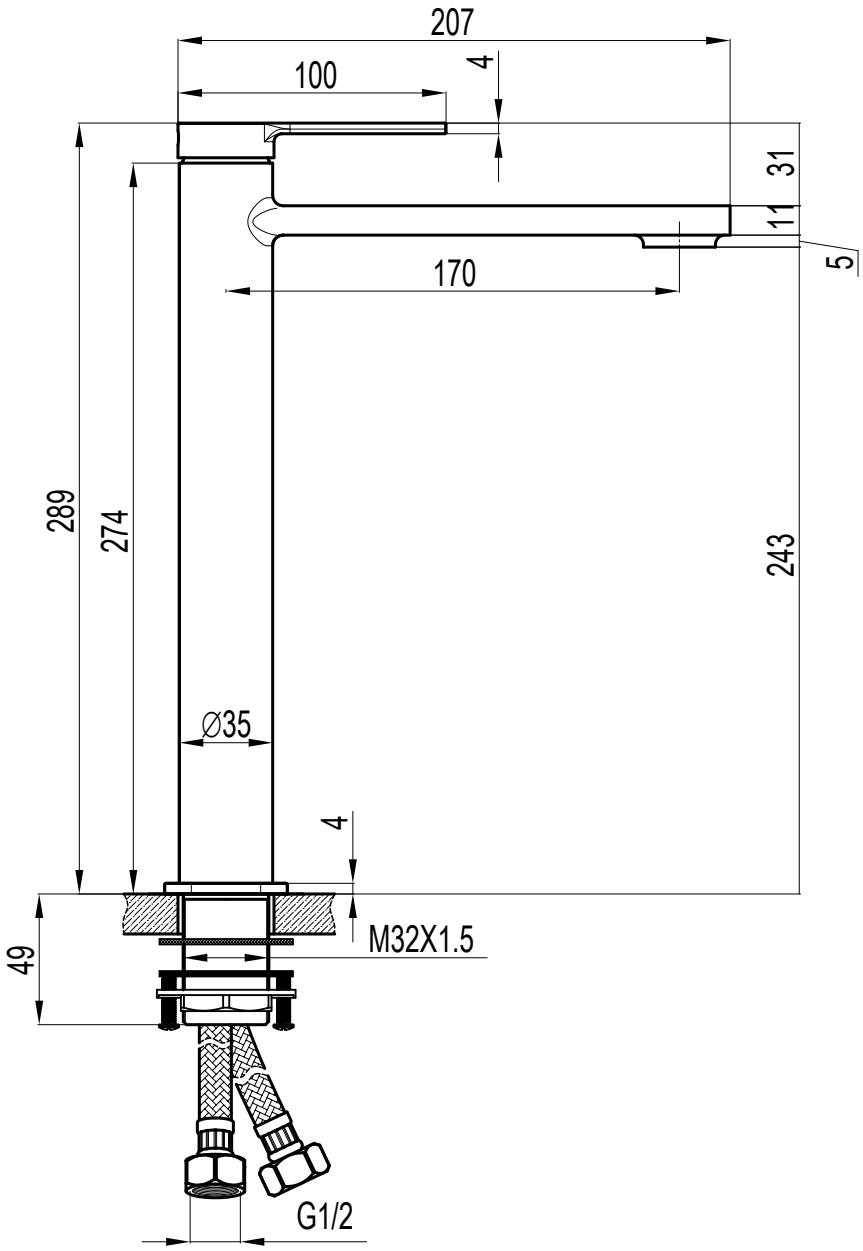

Side View

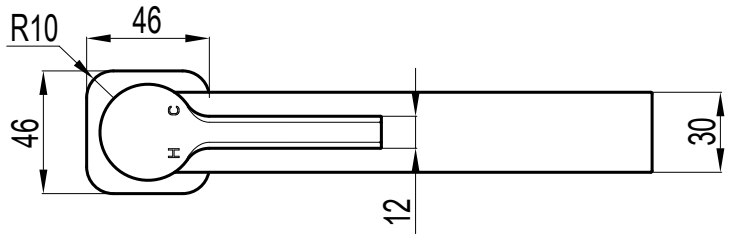

Top View

ahti™

Product Name	Tall Washbasin Tap
Product Code	F01-WBT03

Disclaimer: Always use physical product measurements for mark-ups and roughing in as line the line drawing shown may differ from actual product received. All measurements are shown in millimeters.